General Safety Information

⚠ WARNING

- Before use, check the wheels to make sure that there are no bent or loose spokes, dents, scratches or cracks on the rim surface. Do not use the wheel if any of these problems are found.
- Do not use in combination with bottom link-type suspension forks. With these types of forks, the clearance between the hub axle and the brake shoes can change due to the operation of the suspension, so that when the brakes are applied, the brake shoes may touch the spokes.
- If the quick release mechanism is not used correctly, the wheel may come off the bicycle and serious injury could result. Read the Service Instructions for the quick release mechanism thoroughly before use.
- These wheels are designed for riding on paved surfaces. If the wheels are used on unpaved surfaces, the wheels may become bent or damaged, and accidents may result.
- Check that the wheels are fastened securely before riding the bicycle. If the wheels are loose in any way, they may come off the bicycle and serious injury may result.
- The hollow on the opposite side to the valve hole is an indicator for the amount of rim wear. If this hollow can no longer be seen, stop using the rim.
  If you continue using the rim, it may break, and the bicycle may fall over and an accident may result.
- **Obtain and read the service instructions carefully prior to installing the parts.**
  Loose, worn or damaged parts may cause the bicycle to fall over and serious injury may occur as a result. We strongly recommend only using genuine Shimano replacement parts.
- Read these Technical Service Instructions carefully, and keep them in a safe place for later reference.

⚠ CAUTION

- The tires should be inflated to a suitable pressure before use.
- Use rim tape which can withstand high pressures, otherwise the tires may suddenly puncture and come off, and severe injury may result.

CAUTION

- The Shimano R55HC (high performance) brake shoes use an aggressive compound designed with an emphasis on maximum performance in wet conditions, however they will cause accelerated rim wear.
  Shimano accepts no responsibility for reduced rim life which might occur from using R55HC brake shoes.
- Use of genuine Shimano spokes and nipples is strongly recommended. If non-Shimano parts are used, the area where the spokes fit into the hub unit may become damaged.
- Before use, check that there are no pieces of metal or other foreign objects sticking to the brake pads. If any such items are present, they may cause damage to the rim when the brakes are applied.
- The nipples have large diameters and are easy to rotate in order to make it easier to increase the spoke tension.However, be careful not to overtighten the nipples when adjusting the spoke tensions. If the nipples are overtightened, damage to the rim may result.
  (We recommended that you ask authorized bicycle dealers to make the adjustments.)

Note

- If the wheel becomes stiff and difficult to turn, you should lubricate it with grease.
- Do not apply any oil to the inside of the hub, otherwise the grease will come out.
- Special spoke wrenches are available as optional accessories.
- We recommend that you ask authorized bicycle dealers to adjust the spoke tensions if there is any initial play in the spokes and after the first 1,000 km of riding.
- Spoke protectors (CP-WH23) are also sold separately. Please ask your bicycle dealer for details.
- For maximum performance we highly recommend Shimano lubricants and maintenance products.
- Reflectors (manufactured by CATEYE) are also sold separately. Please ask your bicycle dealer for details.

Model number	Specification	Color
RR-550-WUWSW	CPSC	White
RR-550-WUASW	AS	Amber
RR-317-WUASW	DIN	Amber

- Parts are not guaranteed against natural wear or deterioration resulting from normal use.

In order to realize the best performance, we recommend that the following combination be used.

Applicable tire size		**Clincher tire**
		700C (19C - 25C)
Chain	10-speed	**CN-7801, CN-6600**
Cassette sprocket	10-speed	**CS-7800, CS-6600**

This wheel can be used with 9-gear and 10-gear sprocket sets.
(If using a 10-gear sprocket set other than for a junior bicycle, use the accessory 1-mm spacer.)
Refer to the Product Technical Information for details on combination with other parts such as chains and cassette sprockets.

Specifications

Model number	WH-7850-C24-CL
Speeds	9 / 10
Rim size	700C (622 x 15C)
Rim width	20.8mm

Replacing the spokes

Hook the spokes through the hub as shown in the illustration to install them.

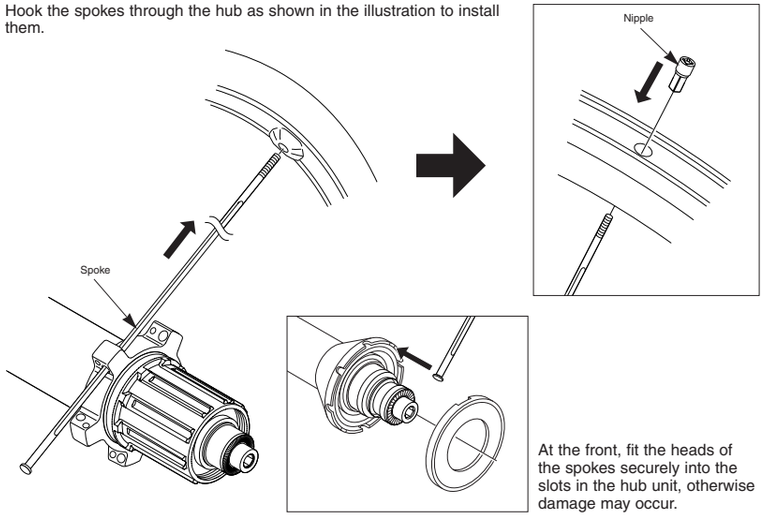

At the front, fit the heads of the spokes securely into the slots in the hub unit, otherwise damage may occur.

Spoke lacing

Lace the spokes as shown in the illustration.

(For front)
At the front, a radial assembly is used at both the left and right

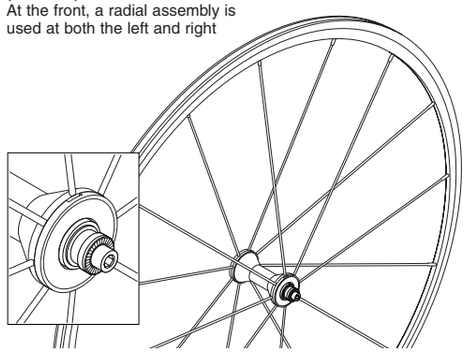

(For rear)
At the rear, a tangent assembly is used at both the left and right.

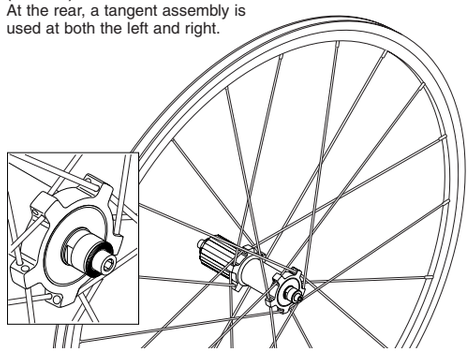

Spoke tension value		
For front	For rear	
	Right (sprocket) side	Left side
1000-1400N (225-315lbf)	1000-1400N (225-315lbf)	600-1000N (135-225lbf)

*These values should be used as a guide only.

Installation of the HG sprockets

For each sprocket, the surface that has the group mark should face outward and be positioned so that the wide parts of the gear projections on each sprocket and the A part (where the groove width is wide) of the freewheel body are aligned.

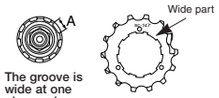

The groove is wide at one place only.

- For installation of the HG sprockets, use the special tool (TL-LR15) to tighten the lock ring.
- To replace the HG sprockets, use the special tool (TL-LR15) and TL-SR21 to remove the lock ring.

Tightening torque:
30 - 50 N·m
{261 - 434 in. lbs.}

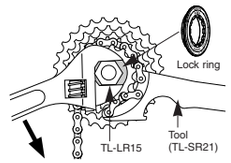

Disassembly

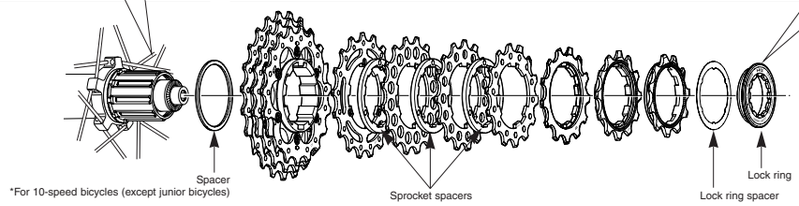

Replacement of the freewheel body

■ First, pull out the hub axle by following the procedure shown in the illustration.
The double-lock section at the freewheel side cannot be disassembled.

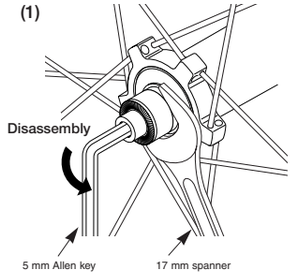

Left side Tightening torque:
15 - 20 N·m {132 - 172 in. lbs.}

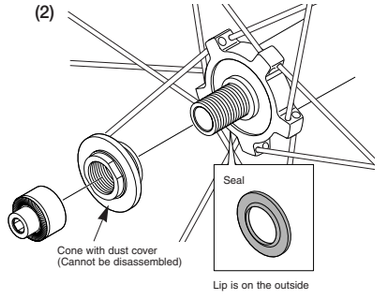

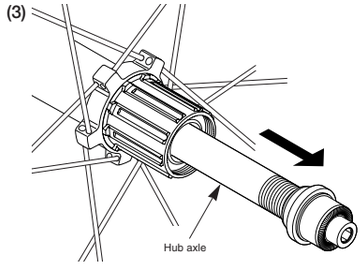

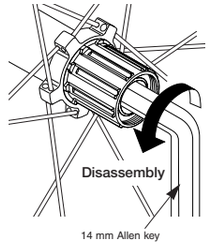

Tightening torque:
45 - 50 N·m {392 - 434 in. lbs.}

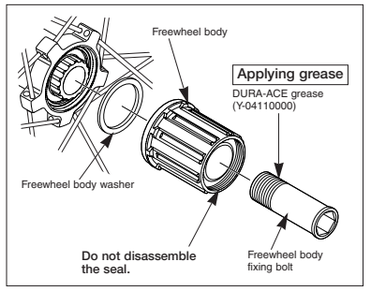

Note:

- When removing and installing the seal, do it very carefully so that the seal does not become bent.
  When reinstalling the seal, make sure that it is facing the right way, and insert it as far as it will go.
- Do not disassemble the dust-proof cover which is crimped onto the cone.

■ After removing the hub axle, remove the freewheel body fixing bolt (inside the freewheel body), and then replace the freewheel body.

Note:
When replacing the freewheel body, replace the freewheel body fixing bolt at the same time. Be sure to apply grease to the the thread of the freewheel body fixing bolt, otherwise looseness or sticking may occur.
Do not attempt to disassemble the freewheel body, because it may result in a malfunction.

Technical Service Instructions **SI-4EF0A-002**

WH-7850-C24-CL | Wheel

SHIMANO

SHIMANO AMERICAN CORPORATION
One Holland, Irvine, California 92618, U.S.A. Phone: +1-949-951-5003

SHIMANO EUROPE B.V.
Industrieweg 24, 8071 CT Nunspeet, The Netherlands Phone: +31-341-272222

SHIMANO INC.
3-77 Oimatsu-cho, Sakai-ku, Sakai-shi, Osaka 590-8577, Japan

Please note: specifications are subject to change for improvement without notice. (English)
© Jan. 2009 by Shimano Inc. XBC IZM Printed in Malaysia.